ASSEMBLY- ACCESSORIES

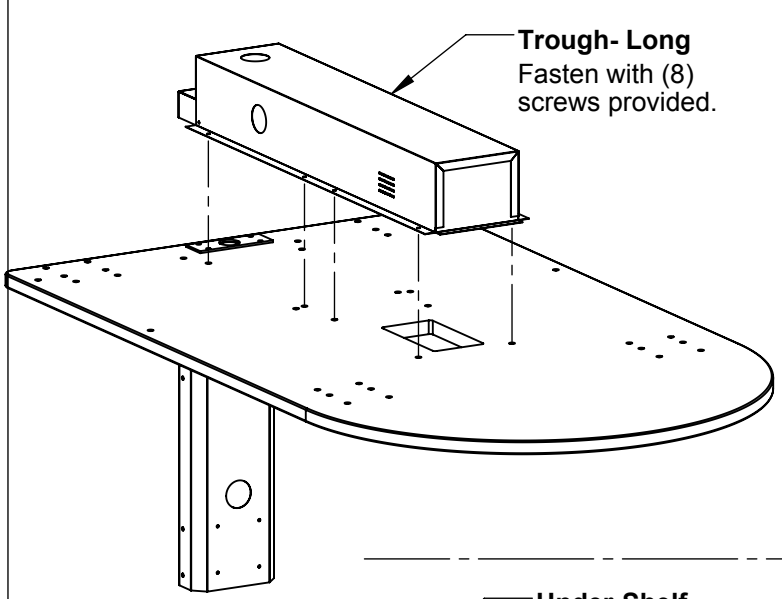

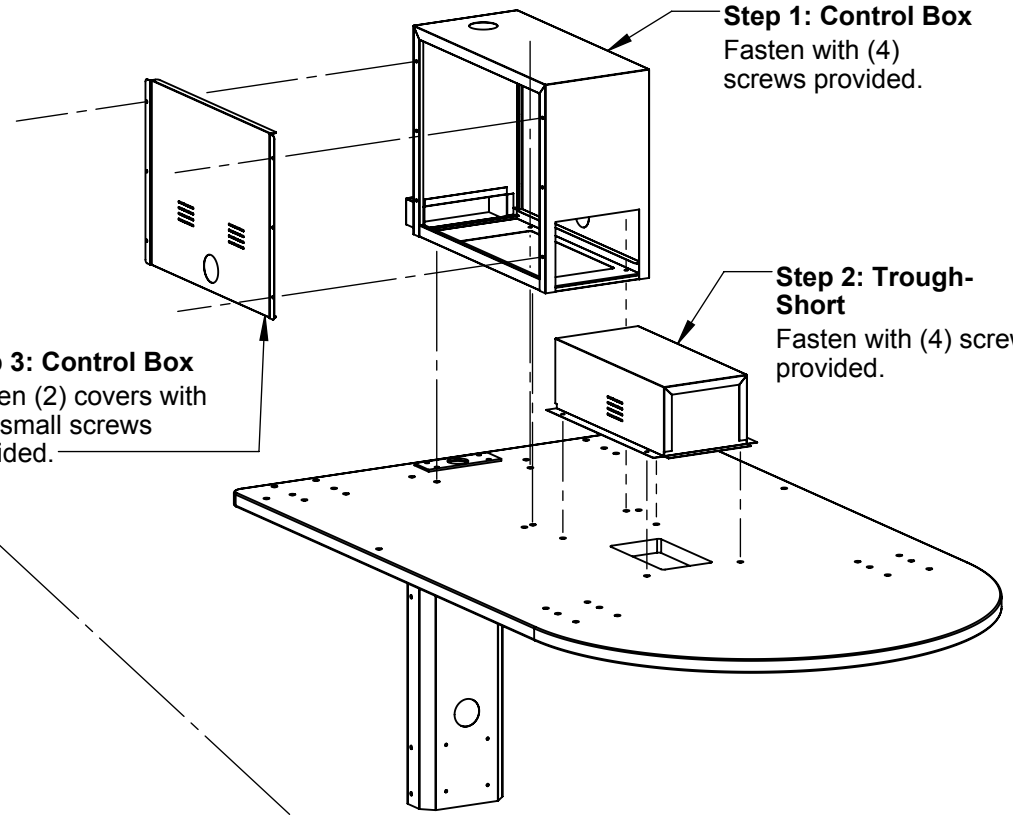

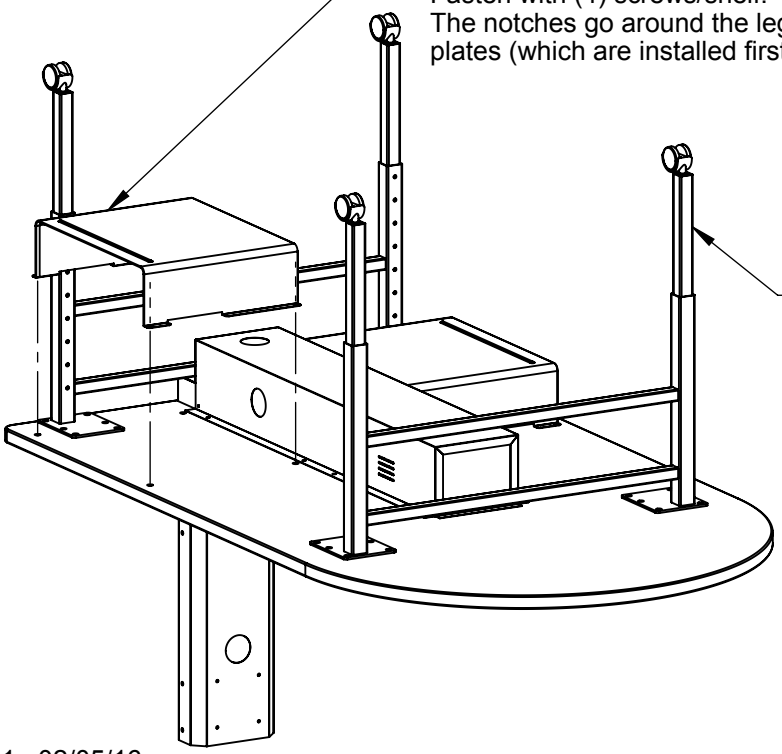

SHEET 1 OF 1

© 2016 Dukane Corporation All rights reserved. Reproduction of this drawing either in whole or in part, including any form of copying and/or preparation of derivative works thereof, for any reason without prior written permission is strictly prohibited.

R05241 02/05/16